FARM ©

estal
OFFICIAL DISTRIBUTOR

MOLERY

Modelo registrado
Registered model
Modèle déposé

Choker Short

WILD FLINT GLASS

WILD DARK GLASS

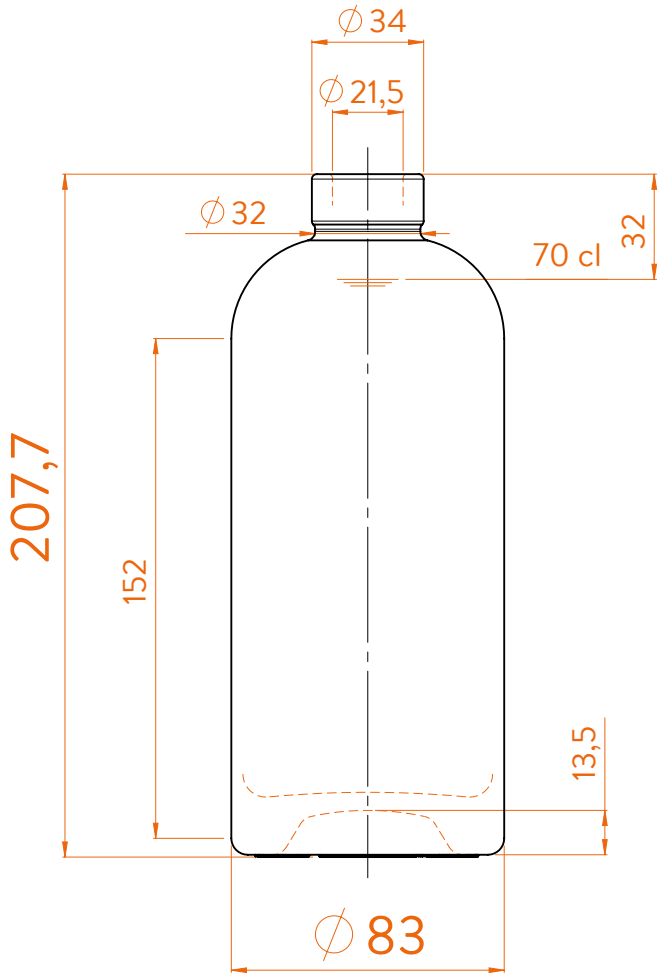

DATOS TÉCNICOS
TECHNICAL DATA
DONNÉES TECHNIQUES

70 cl

Peso / Weight / Poids	600 gr
Altura total / Total height / Hauteur totale	207,7 mm
Diámetro del cuerpo / Boby diameter / Diamètre du corps	83 mm
Ø interno boca / ∅ inner mouth / ∅ intérieur bouche	21,5 mm
Capacidad a verter / Brimfull / Capacité ras-bord	727 ml

At first the FARM range is proposed in 70/75 cl.
Following business opportunities, other sizes (from miniature 5cl to big size 300cl) will be added to the range.

The elements detailed in this document are not contractual. They are only indicative.