WILDLY CRAFTED©
NATURAL

estal
OFFICIAL DISTRIBUTOR

MOLERY

Modelo registrado/
Registered model/
Modèle enregistré/

Choker Short

- AMBER
- EXTRA FLINT
- FLINT WILD GLASS

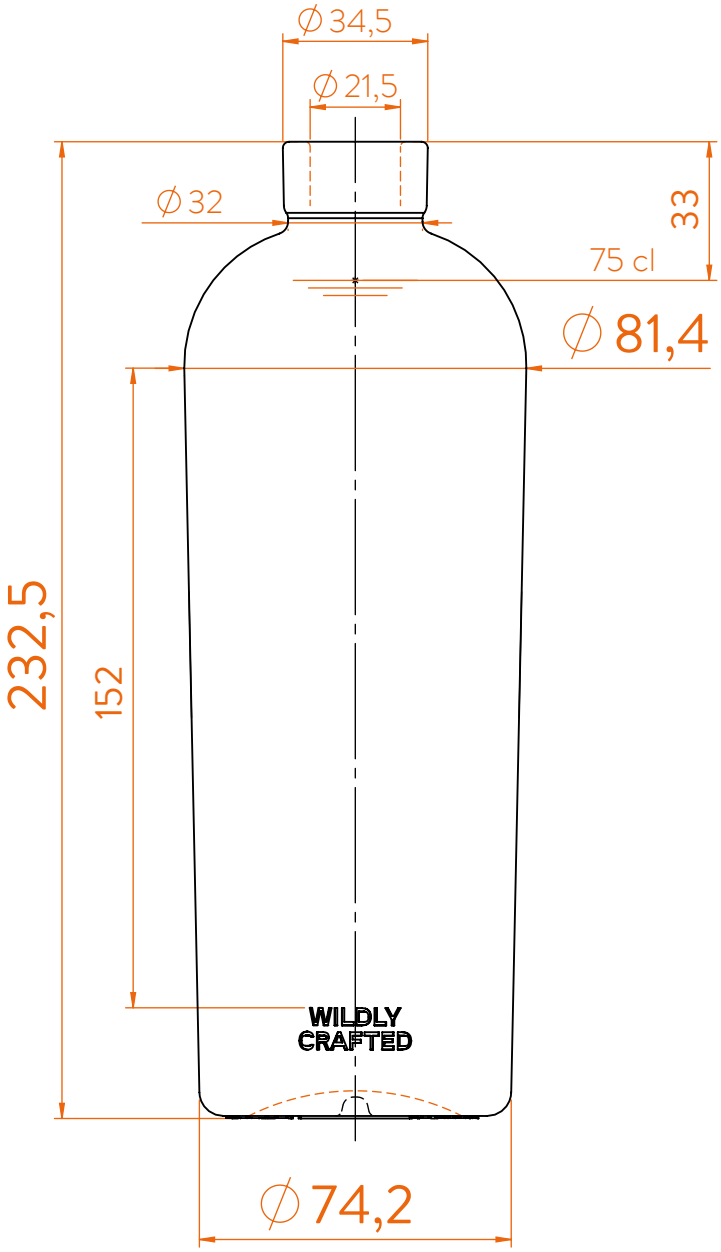

DATOS TÉCNICOS TECHNICAL DATA DONNÉES TECHNIQUES	**75 cl**
Peso / Weight / Poids	500 gr
Altura total / Total height / Hauteur totale	232,5 mm
Diámetro del cuerpo / Boby diameter / Diamètre du corps	74,2/81,4 mm
Ø interno boca / ∅ inner mouth / ∅ intérieur bouche	21,5 mm
Capacidad a verter / Brimfull / Capacité ras-bord	776 ml

At first the WILDLY CRAFTED NATURAL range is proposed in 70/75 cl.
Following business opportunities, other sizes (from miniature 5cl to big size 300cl) will be added to the range.

The elements detailed in this document are not contractual. They are only indicative.