TOUL ©

estal
OFFICIAL DISTRIBUTOR

MOLERY

Modelo registrado/
Registered model/
Modèle enregistré/

Bartop 18,5

EXTRA FLINT

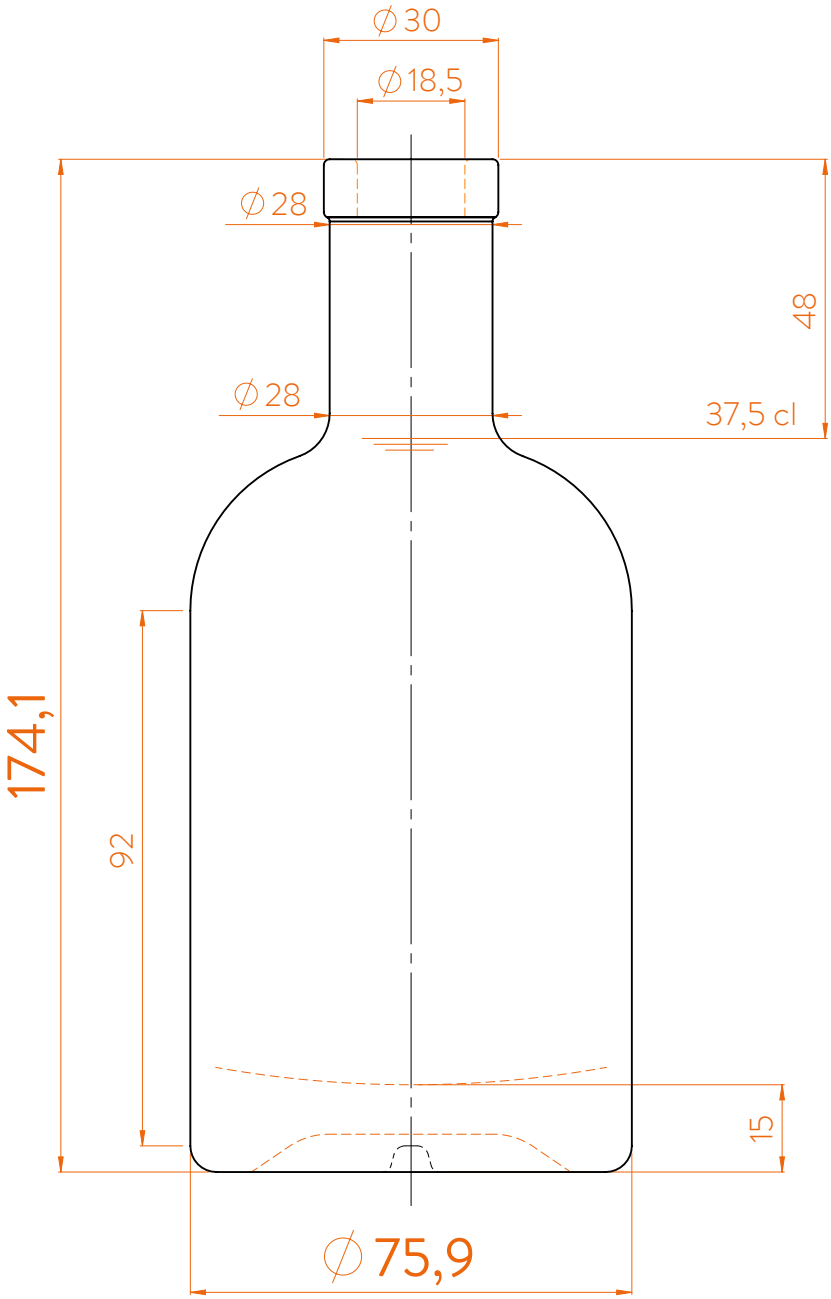

DATOS TÉCNICOS
TECHNICAL DATA
DONNÉES TECHNIQUES

	37,5 cl
Peso / Weight / Poids	400 gr
Altura total / Total height / Hauteur totale	174,1 mm
Diámetro del cuerpo / Boby diameter / Diamètre du corps	75,9 mm
Ø interno boca / ∅ inner mouth / ∅ intérieur bouche	18,5 mm
Capacidad a verter / Brimfull / Capacité ras-bord	390 ml

At first the TOUL range is proposed in 37,5/20/50/70/75/100/150 cl.
Following business opportunities, other sizes (from miniature 5cl to big size 300cl) will be added to the range.

The elements detailed in this document are not contractual. They are only indicative.